Land Specialties Manufacturing

landspecialties@sbcglobal.net
816-358-1825
800-368-4883

This document contains information proprietary to LAND SPECIALTIES MFG.
Use and/or copying is strictly prohibited without
prior written authorization from LAND SPECIALTIES MFG.

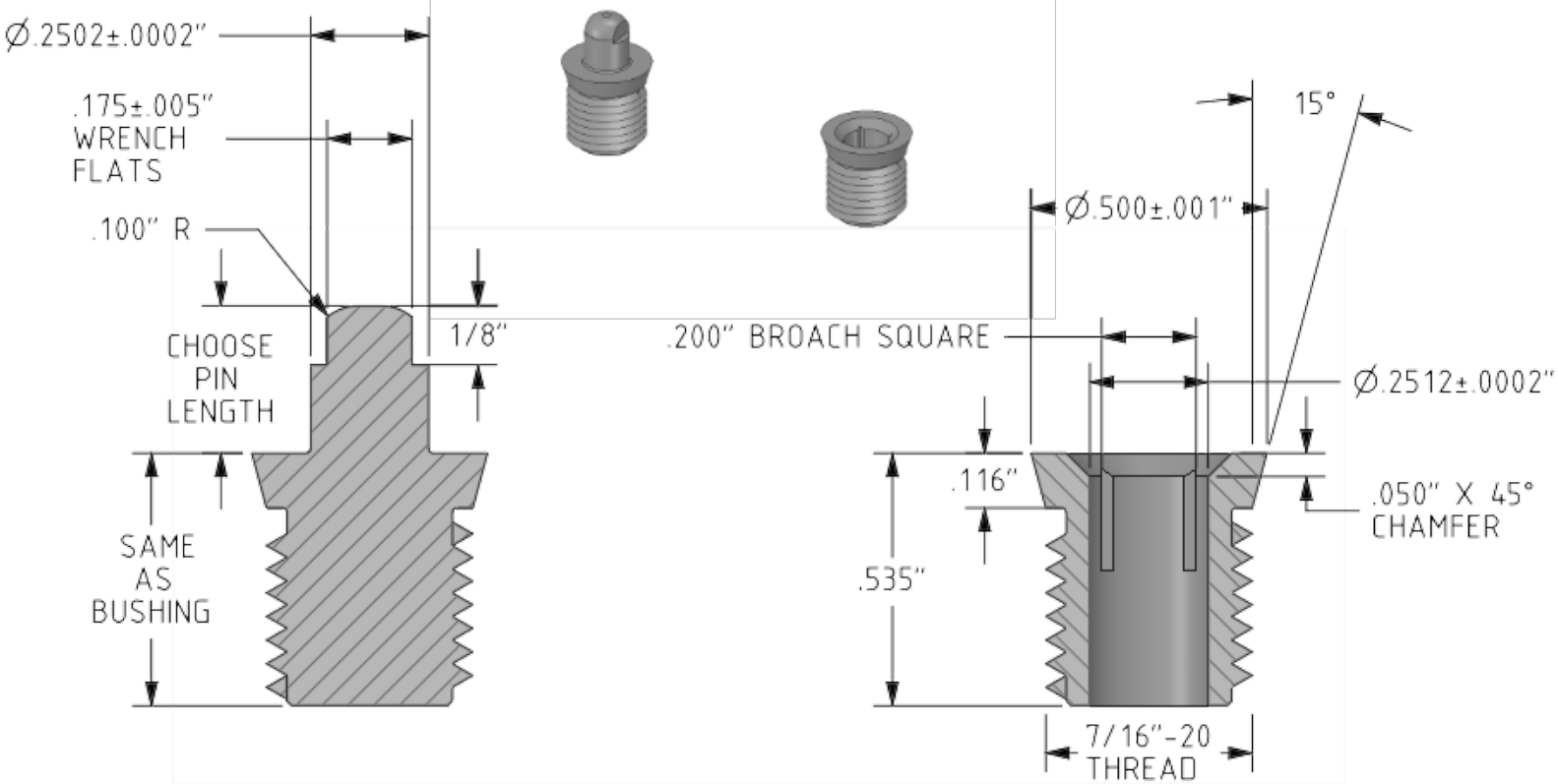

PART #	MATERIAL:	DESCRIPTION:	NOTES:
BLANK	STRESSPROOF RC 50-54	1/4" MOLD PIN & BUSHING SET	All decimal diameters to be concentric within .0002"